"K" series is one of the most powerful SUNIGHT lighting towers, entire hydraulic system with electrical controlling make every operation to be fast and flexible, more safe and reliable. The six most shining floodlights can illuminate an area of 500 meters radius.

K Series Lighting Tower

KP Series System Features

1

The galvanized mast and the powder coated canopy suit the outdoor environment for a long time.
The heavy-duty muffler and the soundproof canopy make the noise level under 70 dB(A) at 7 meters away.

2

The electrical controlling hydraulic system with the over center valves and hydraulic locks make every operation smooth and safe, and can keep the hydraulic ram in any position for a long time even when the oil leaks out from the pipes or connecters.

3

The light bar can be adjusted from horizontal to vertical, and the mast can rotate within 340°by the control panel operation.

4

The simple and clear graphic indication and operating mark on the control panel.
Automatic light control system, all of the lights turn on or turn off in order.

5

All the outdoor electrical plugs and sockets are at least IP44 protective class.
The lights are IP65 or IP66 protective class.

6

The external IP44 output sockets will power other equipments or electric tools whenever.

7

The excellent-quality and multi-fault protection generator with the low-emission diesel engine and brushless alternator can power all of the lights stably and continuously.
The fully bunded tank avoid the fuel spilling out.

8

The hydraulic legs of individual operation are able to support stably and reliably even on rough ground, so the lighting tower can also work in the 10 grade windy weather.

Option equipment:

1. Radio remote control system: It can remotely adjust light bar tilt and mast rotation within diameter 100 meters. Another option is SMS remote control function, the lighting tower will be started or stopped remotely by the relative mobile phone, and it can receive the fault alarm message from the lighting tower's controller.
2. The searching lighting mode (it need to fit particular parts): Then the lighting tower can light circularly in order within 180° at several different titlt angles, especially suit the warehouses, camps, border checkpoints or special monitoring area.

KP Series Dimensions

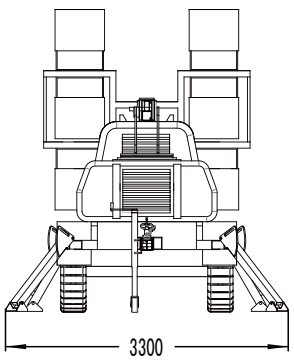

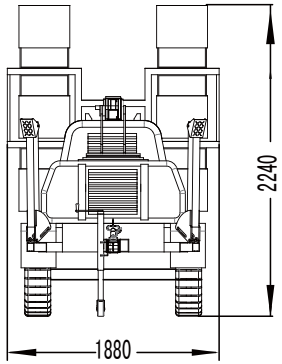

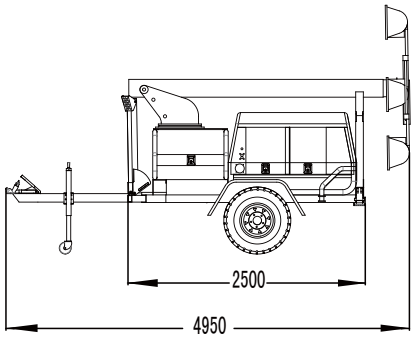

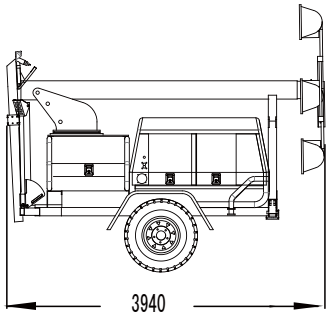

(mm)

Note:The above datas could be modified in any time,please question our sales engineers when you want to get the latest technical details of relevant products.

SUNIGHT 6HKP6000

Standard Equipment	6HKP6000					
Length (mm)	4950 (3820, Detached the tow bar)					
Width (mm)	1880					
Height (mm)	2150					
Mast Heigth(m,Fully Extended)	10					
Weight (gross)	2530kg					
Engine model	V1505-BG(Kubota)		3TNV88(Yanmar)		403D-15G(Perkins)	
Frequency(Hz)	50	60	50	60	50	60
Speed(rpm)	1500	1800	1500	1800	1500	1800
Continued Power(kVA)	12.5	15	12.5	15	12.5	14.5
Number of Cylinders	4		3		3	
Diesel Engine Characters	4-cycle, In line, Watercooled Diesel					
Combustion Type	Precombustion		Direct Injection		Indirect Injection	
Engine Aspiration	Natural					
Emission Level	Stage3	Tier4	Stage3	Tier4	Stage2	Tier4
Alternator	Brushless & Single phase					
Rating Voltage (V)	230					
Alternator Insulation	H class					
Fuel Tank Type	Bunded Tank					
Fuel Tank Capacity	228 liters (60 US Gallons)					
Fuel Tank Operating Hours	60 hours					
Type of Lights	Metal Halide Floodlight					
Number & Power of Lights	6×1000W					
Mast Lifting & Extension	Hydraulic operation					
Mast Rotation	340° Hydraulic operation					
Light Bar Tilt	90° Electric operation					
Automatic Light Controller	SWT(Including generator control function)					
Stabilizing Legs	Hydraulic operation					
Trailer Suspension System	Leaf spring axle & stable hitch in height					
Braking System	Drum brake					
Hitch	Ball or O ring					
Tire Rim Size	16″					
Acoustic Pressure	70dB(A) at 7 meters away					
Output Sockets	1 PCS (230V,10A)					
Max.load quantity in a 40' container (sets)	3					

Optional Equipment	
More Powered Engine	Kubota/Yanmar/Perkins
Cold Weather Starting Kit	Kubota/Yanmar/Perkins
Thermal Control System	SWT
Input Sockets & MTS	1 set (230V,63A)
Light	Similar famous or local brand
Stabilisers Support	Manual Operation
Trailer	Hexagon rubber axis
Braking System	Inertia drum braking with adjustable hitch in height
Mining Configuration	

Note:The above datas could be modified in any time,please question our sales engineers when you want to get the latest technical details of relevant products.

6HKP9000 SUNIGHT

Standard Equipment	6HKP9000					
Length (mm)	4950 (3680, Detached the tow bar)					
Width (mm)	1880					
Height (mm)	2150					
Mast Height(m,Fully Extended)	10					
Weight (gross)	2730kg					
Engine model	D1703-BG(Kubota)		3TNV84T(Yanmar)		404D-22G(Perkins)	
Frequency(Hz)	50	60	50	60	50	60
Speed(rpm)	1500	1800	1500	1800	1500	1800
Continued Power(kVA)	15	18	14.5	17	18.5	22
Number of Cylinders	4		3		3	
Diesel Engine Characters	4-cycle, In line, Watercooled Diesel					
Combustion Type	Precombustion		Direct Injection		Indirect Injection	
Engine Aspiration	Natural		Turbo charged		Natural	
Emission Level	Stage3	Tier4	Stage3	Tier4	Stage2	Tier4
Alternator	Brushless & Single phase					
Rating Voltage (V)	230					
Alternator Insulation	H class					
Fuel Tank Type	Bunded Tank					
Fuel Tank Capacity	228 liters (60 US Gallons)					
Fuel Tank Operating Hours	40 hours					
Type of Lights	Metal Halide Floodlight					
Number & Power of Lights	6×1500W					
Mast Lifting & Extension	Hydraulic operation					
Mast Rotation	340° Hydraulic operation					
Light Bar Tilt	90° Electric operation					
Automatic Light Controller	SWT(Including generator control function)					
Stabilizing Legs	Hydraulic operation					
Trailer Suspension System	Leaf spring axle & stable hitch in height					
Braking System	drum brakes					
Hitch	Ball or O ring					
Tire Rim Size	16″					
Acoustic Pressure	70dB(A) at 7 meters away					
Output Sockets	1 PCS (230V,10A)					
Max.load quantity in a 40' container (sets)	3					

Optional Equipment	
More Powered Engine	Kubota/Yanmar/Perkins
Cold Weather Starting Kit	Kubota/Yanmar/Perkins
Thermal Control System	SWT
Light	Similar famous brand
Stabilisers Support	Manual Operation
Trailer	Hexagon rubber axis
Braking System	Inertia drum braking with adjustable hitch in height
Input terminals & MTS	1 set (230V,63A)
Mining Configuration	

Note:The above datas could be modified in any time,please question our sales engineers when you want to get the latest technical details of relevant products.