"V" series is the latest design and manufacture lighting tower with the vertical telescopic mast . The operation is simpler than other series lighting tower. And the smaller size make the transportation become more convenient.

The V series includes VL、VP、VB、SVLandCVL.

V Series Lighting Tower

——VL、VP、VB、SVL、CVL

VL Series Lighting Tower

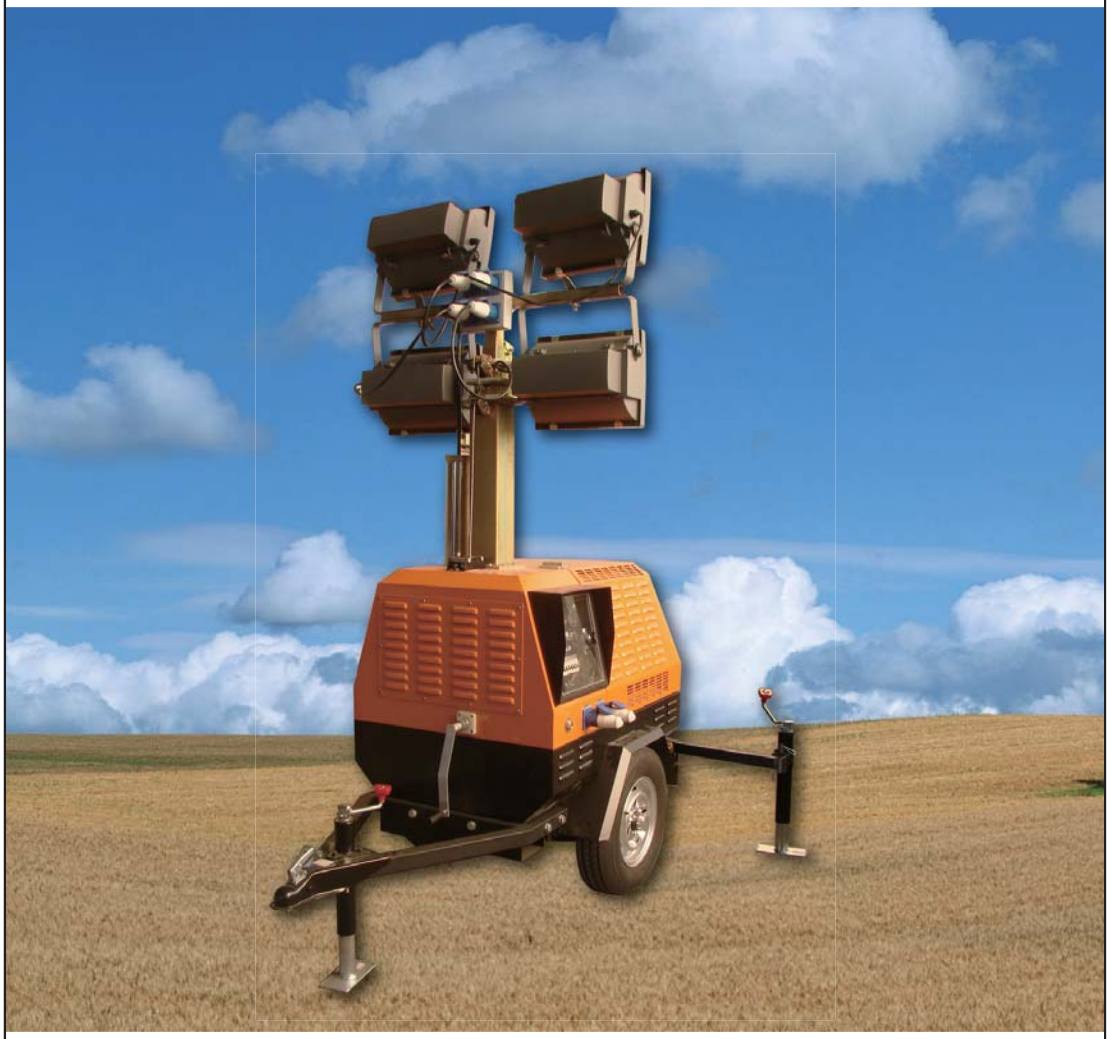

VL Series Features

VL Manual Type Features:

- 5-sections telescopic mast can be extended manually.

VL Electrical Type Features:

- The safe and reliable 5-sections telescopic mast powered by the DC electrical linear actuator can be extended to 7.2 meters altitude fully;
- The linear actuator is able to work in colder climate. The self-locking ball screw can keep the altitude at any position for a long time.

The features of electric and manual types:

- The light bar can be extended to 7 meters altitude fully, and its shooting angle can be manually adjusted at the lowest position easily;
- The trunk with air-springs is easy for maintenance;
- The AL-KO Hexagon rubber suspension system is suitable for variously rough road, and its maintenance-free axis's service life will be at least 20 years;
- The electrical devices of the lights are fitted in the trunk, and it's easy to fix. The most cable can be retracted in the protective stainless steel tube;
- The galvanized mast and the powder coated canopy suit the outdoor environment for a long time;
- Three manual legs of individual operation are able to support stably and reliably even on rough g-round, so the lighting tower can also work in the 8 grade windy weather;
- The lights are IP65 or IP66 protective class.

VL Series Dimension

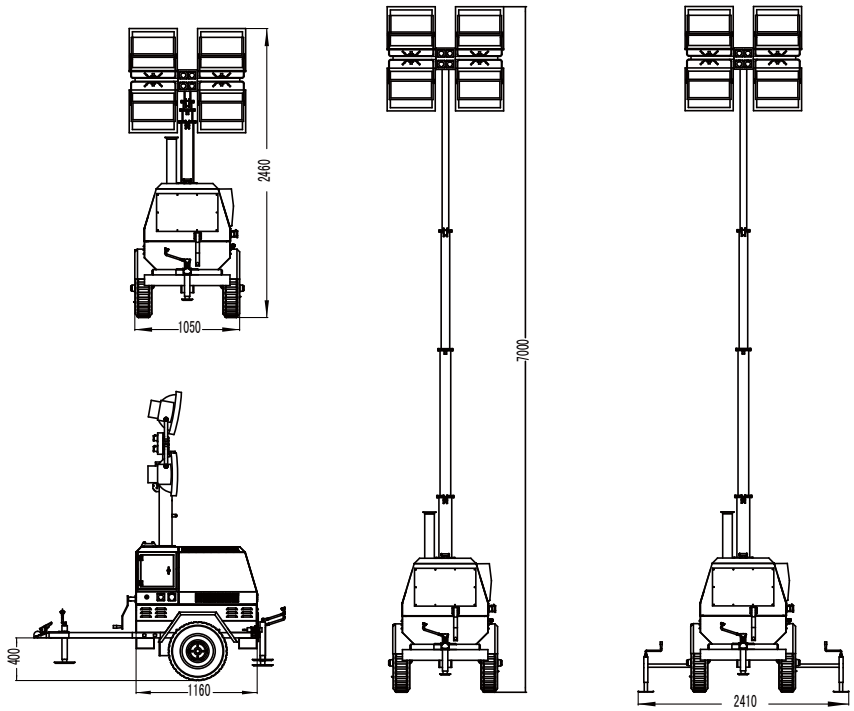

Note:The above datas could be modified in any time,please question our sales engineers when you want to get the latest technical details of relevant products.

SUNIGHT 4VL1600

Standard Equipment	4VL1600	
Length (mm)	2180 (1160 , Detached the tow bar)	
Width (mm)	1050	
Height (mm)	2460(2250,Detached the lights)	
Mast Height(m,Fully Extended)	7	
Weight (gross)	380kg	
Engine model	178F (CHANGCHAI)	
Frequency(Hz)	50	60
Speed(rpm)	3000	3600
Continued Power(kVA)	2.7	3.2
Number of Cylinders	1	
Diesel Engine Characters	4-Cycle, In line, Aircooled diesel	
Combustion Type	Direct injection	
Engine Aspiration	Natural	
Emission Level	N.A.	Tier4
Rating Voltage (V)	230	
Alternator Insulation	class H	
Fuel Tank Capacity	38 liters (10 US Gallons)	
Fuel Tank Operating Hours	60 hours	
Type of Lights	GEWISS Metal Halide Floodlight	
Number & Power of Lights	4×400W	
Mast Extension	Manual operation	
Number of Mast Sections	5	
Light Tilt	Manual operation	
Stabilizing Legs	Manual operation	
Trailer Suspension System	Hexagonal rubber suspension	
Hitch	Ball or O ring	
Tire Rim Size	13″	
Output Sockets	1 PCS (230V,10A)	
Input Sockets & MTS	1 set (230V,16A)	
Acoustic Pressure	78dB(A) at 7 meters away	
Max. load quantity in a 20' container (sets)	10	

Optional Equipment	
Engine	Similar Famous or Local Brand
Light	Metal Halide Spotlight (Local Brand)
Mast Extension	Electric operation
Trailer Suspension System	Leaf spring axle & stable hitch in height

Note:The above datas could be modified in any time,please question our sales engineers when you want to get the latest technical details of relevant products.

SUNIGHT 3VL3000

Standard Equipment	3VL3000	
Length (mm)	2180 (1160 , Detached the tow bar)	
Width (mm)	1050	
Height (mm)	2460(2250,Detached the lights)	
Mast Height(m,Fully Extended)	7	
Weight (gross)	420kg	
Engine model	186F (CHANGCHAI)	
Frequency(Hz)	50	60
Speed(rpm)	3000	3600
Continued Power(kVA)	4.2	5.0
Number of Cylinders	1	
Diesel Engine Characters	4-Cycle, In line, Aircooled diesel	
Combustion Type	Direct injection	
Engine Aspiration	Natural	
Emission Level	N.A.	Tier4
Rating Voltage (V)	230	
Alternator Insulation	class H	
Fuel Tank Capacity	38 liters (10 US Gallons)	
Fuel Tank Operating Hours	32 hours	
Type of Lights	Metal Halide Floodlight (Original GEWISS)	
Number & Power of Lights	3×1000W	
Mast Extension	Manual operation	
Number of Mast Sections	5	
Light Tilt	Manual operation	
Stabilizing Legs	Manual operation	
Trailer Suspension System	Hexagonal rubber suspension	
Hitch	Ball or O ring	
Tire Rim Size	13″	
Output Sockets	1 PCS (230V,10A)	
Input Sockets & MTS	1 set (230V,16A)	
Acoustic Pressure	78dB(A) at 7 meters away	
Max. load quantity in a 20' container (sets)	10	

Optional Equipment	
Engine	Similar Famous or Local Brand
Light	Metal Halide Spotlight
Mast Extension	Electric operation
Trailer Suspension System	Leaf spring axle & stable hitch in height

Note:The above datas could be modified in any time,please question our sales engineers when you want to get the latest technical details of relevant products.

4VL4000 Dimension

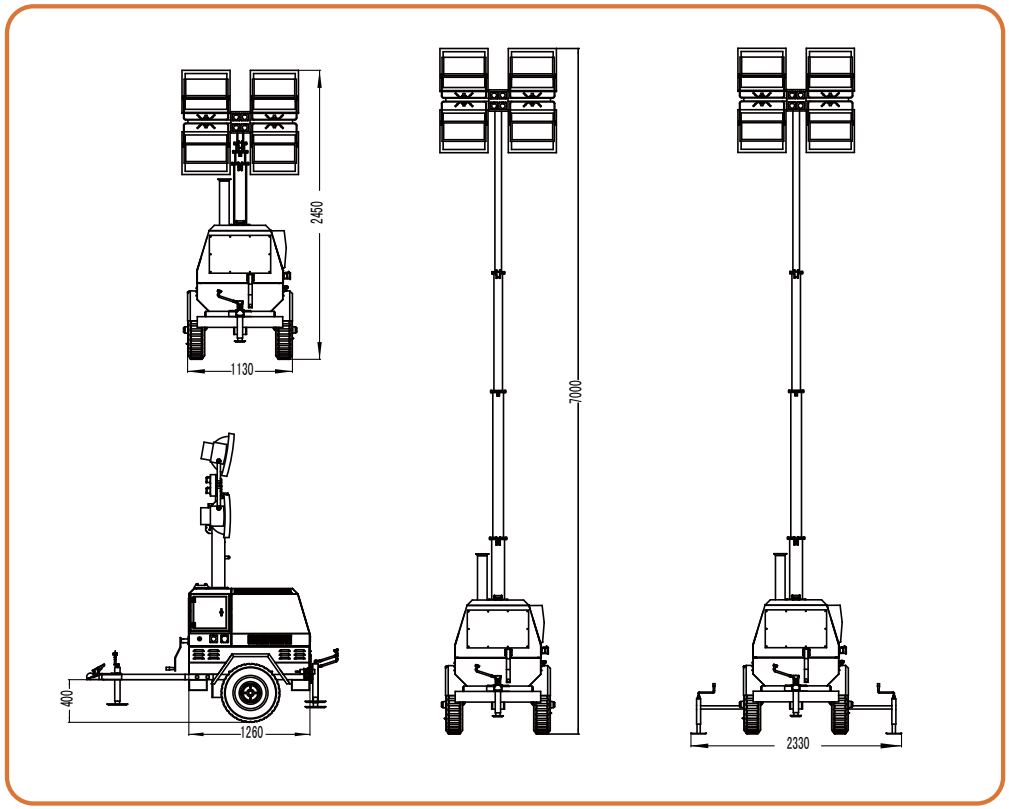

Note:The above datas could be modified in any time,please question our sales engineers when you want to get the latest technical details of relevant products.

SUNIGHT 4VL4000

Standard Equipment	4VL4000		
Length (mm)	2330(1260,Detached the tow bar)		
Width (mm)	1130		
Height (mm)	2450(2250,Detached the lights)		
Mast Height(m,Fully Extended)	7		
Weight (gross)	550kg		
Engine model	L100N(Yanmar)		186F (CHANGCHAI)
Frequency(Hz)	50	60	60
Speed(rpm)	3000	3600	3600
Continued Power(kVA)	4.4	5.1	5.0
Number of Cylinders	1		
Diesel Engine Characters	4-Cycle, In line, Aircooled diesel		
Combustion Type	Direct injection		
Engine Aspiration	Natural		
Emission Level	Stage3	Tier4	Tier4
Rating Voltage (V)	230		
Alternator Insulation	class H		
Fuel Tank Capacity	38 liters (10 US Gallons)		
Fuel Tank Operating Hours	32 hours		
Type of Lights	Metal Halide Floodlight (Original GEWISS)		
Number & Power of Lights	4×1000W		
Mast Extension	Manual operation		
Number of Mast Sections	5		
Light Tilt	Manual operation		
Stabilizing Legs	Manual operation		
Trailer Suspension System	Hexagonal rubber suspension		
Hitch	Ball or O ring		
Tire Rim Size	13″		
Output Sockets	1 PCS (230V,10A)		
Input Sockets & MTS	1 set (230V,16A)		
Acoustic Pressure	78dB(A) at 7 meters away		
Max. load quantity in a 20' container (sets)	8		

Optional Equipment	
Trailer Suspension System	Leaf spring axle & stable hitch in height
Mast Extension	Electric operation
Light	Metal Halide Spotlight/Flood light (Local Brand)

Note:The above datas could be modified in any time,please question our sales engineers when you want to get the latest technical details of relevant products.

VL Hydraulic Types

- The safe and reliable 8-section telescopic mast powered by hydraulic ram can be extended to 9 meters altitude fully;
- The light bar can be adjusted from horizontal to vertical by the control panel operation;
- The hydraulic one-way valve with electric controlling can make the hydraulic ram keep the any position for long time;
- The mast can rotate within 330° manually;
- The inertia braking system can mostly reduce the collision when the vehicle is braking;
- The heavy-duty muffler makes the noise under 75 dB(A) at 7 meters away;
- The galvanized mast and the powder coated canopy suit the outdoor environment for a long time;
- The electrical devices of the lights are fitted in the weatherproof canopy, and it's easy to fix;
- The most cable can be retracted in the protective stainless steel tube;
- The excellent-quality and multi-fault protection generator with the low-emission diesel engine and brushless alternator can power all of the lights stably and continuously;
- The smaller size is easy to be loaded. The maximum would be 9 sets in a 40 feet container;
- The AL-KO Hexagon rubber suspension system is suitable for variously rough road, and its maintenance-free axis's service life will be at least 20 years;
- Four manual legs of individual operation are able to support stably and reliably even on rough ground, so the lighting tower can also work in the 9 grade windy weather;
- The base frame with fully bunded tank avoid the fuel spill out.

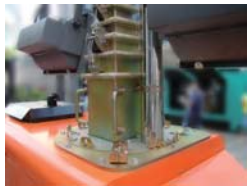

4HVL4000 Dimension

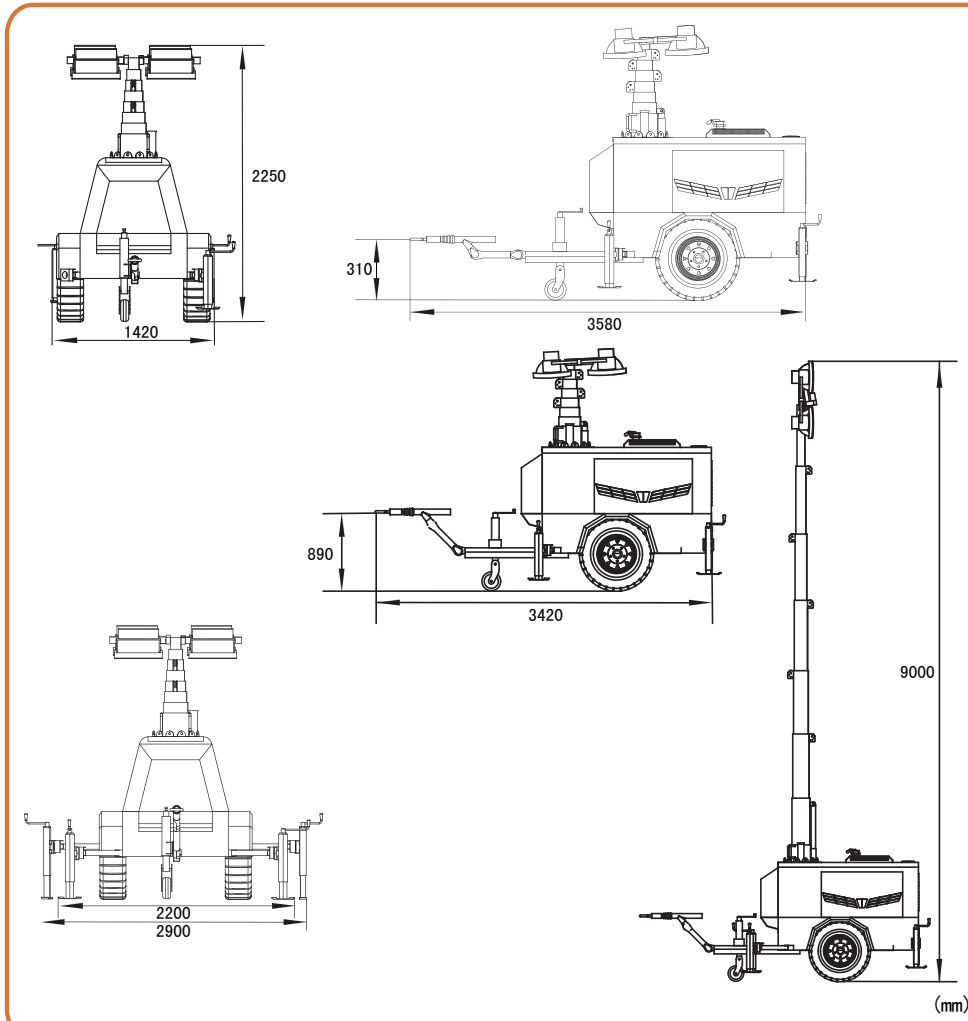

Note:The above datas could be modified in any time,please question our sales engineers when you want to get the latest technical details of relevant products.

4HVL4000

Standard Equipment	4HVL4000							
Length (mm)	3420 (1920,Detached the tow bar)							
Width (mm)	1420							
Height (mm)	2250							
Mast Height(m,Fully Extended)	9							
Weight (gross)	1250 kg							
Engine model	D1105-BG(Kubota)		3TNV76(Yanmar)		403D-11G(Perkins)		380 (Lester)	
Frequency(Hz)	50	60	50	60	50	60	50	60
Speed(rpm)	1500	1800	1500	1800	1500	1800	1500	1800
Continued Power(kVA)	7	9	7	9	7	9	7	9
Number of Cylinders	3							
Diesel Engine Characters	4-cycle, In line, Watercooled Diesel							
Combustion Type	Precombustion		Direct Injection		Indirect Injection		Direct Injection	
Engine Aspiration	Natural							
Emission Level	Stage3	Tier4	Stage3	Tier4	Stage2	Tier4	N.A.	Tier4
Alternator	Brushless & Single phase							
Rating Voltage (V)	230							
Alternator Insulation	class H							
Fuel Tank Type	Bunded Tank							
Fuel Tank Capacity	120liters (31 US Gallons)							
Fuel Tank Operating Hours	72 hours							
Type of Lights	Metal Halide Floodlight (Original GEWISS)							
Number & Power of Lights	4×1000W							
Mast Extension	Hydraulic operation							
Number of Mast Section	8							
Mast Erection Time	<30 Seconds							
Mast Rotation	330° Manual Operation							
Light Bar Tilt	90° DC Electric operation							
Stabilizing Legs	Manual operation							
Trailer Suspension System	Hexagonal rubber suspension							
Braking System	Inertia drum braking with stable hitch in height							
Hitch	Ball or O ring							
Tire Rim Size	14″							
Output Sockets	1 PCS (230V,10A)							
Input terminals & MTS	1 set (230V,32A)							
Acoustic Pressure	72dB(A) at 7 meters away							
Max. load quantity in a 40' container (sets)	9							

Optional Equipment	
More Powered Engine	Kubota/Yanmar/Perkins
Cold Weather Starting Kit	Kubota/Yanmar/Perkins
Thermal Control System	SWT
Automatic Light Controller	SWT(Including generator control function)
Trailer Suspension System	Leaf spring axle & stable hitch in height
Stabilizing Legs	Hydraulic operation
Light	Metal Halide Floodlight (Local Brand)

Note:The above datas could be modified in any time,please question our sales engineers when you want to get the latest technical details of relevant products.

4HVL6000 Dimension

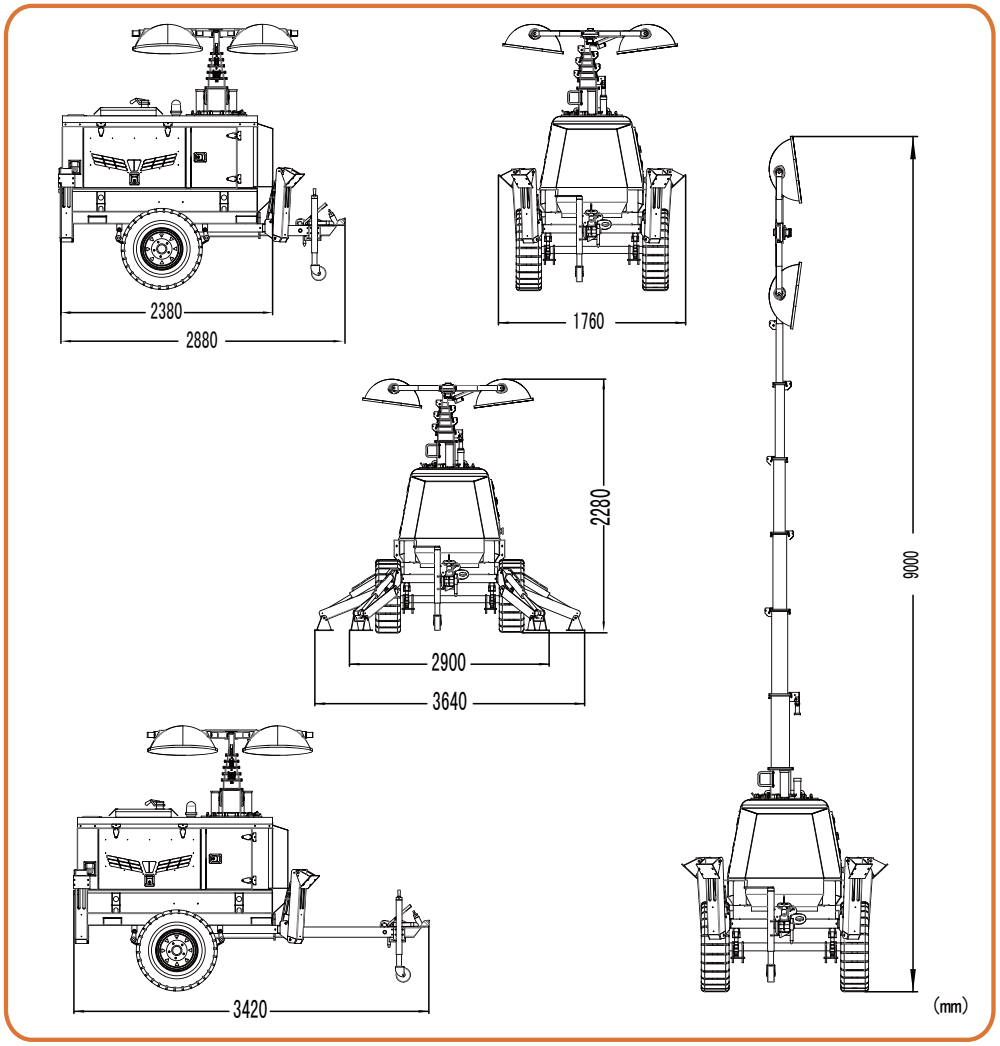

Note:The above datas could be modified in any time,please question our sales engineers when you want to get the latest technical details of relevant products.

4HVL6000

SUNIGHT

Standard Equipment	4HVL6000							
Length (mm)	3420(2880,Detached the tow bar)							
Width (mm)	1760							
Height (mm)	2280							
Mast Height(m,Fully Extended)	9							
Weight (gross)	1660 kg							
Engine model	D1105-BG(Kubota)		3TNV82A(Yanmar)		403D-11G(Perkins)		385 (Lester)	
Frequency(Hz)	50	60	50	60	50	60	50	60
Speed(rpm)	1500	1800	1500	1800	1500	1800	1500	1800
Continued Power(kVA)	9.5	10.5	9.5	11.5	9	10	9	11
Number of Cylinders	3							
Diesel Engine Characters	4-cycle, In line, Watercooled Diesel							
Combustion Type	Precombustion		Direct Injection		Indirect Injection		Direct Injection	
Engine Aspiration	Natural							
Emission Level	Stage3	Tier4	Stage3	Tier4	Stage2	Tier4	N.A.	Tier4
Alternator	Brushless & Single phase							
Rating Voltage (V)	230							
Alternator Insulation	class H							
Fuel Tank Type	Bunded Tank							
Fuel Tank Capacity	120 liters (31 US Gallons)							
Fuel Tank Operating Hours	50 hours							
Type of Lights	Metal Halide floodlight							
Number & Power of Lights	4×1500W							
Mast Extension	Hydraulic operation							
Number of Mast Section	8							
Mast Erection Time	<30 Seconds							
Mast Rotation	330° Manual Operation							
Light Bar Tilt	90° DC Electric operation							
Stabilizing Legs	Manual operation							
Trailer Suspension System	Leaf spring axle & stable hitch in height							
Braking System	Drum brake							
Hitch	Ball or O ring							
Output Sockets	1 PCS (230V,10A)							
Acoustic Pressure	68dB(A) at 7 meters away							
Max. load quantity in a 40' container (sets)	5							

Optional Equipment	
Trailer Suspension System	Hexagonal rubber suspension
Braking System	Inertia drum braking with adjustable hitch in height
Stabilizing Legs	Manual operation

Note:The above datas could be modified in any time,please question our sales engineers when you want to get the latest technical details of relevant products.

VP Series Lighting Tower

4HVP4000 Dimension

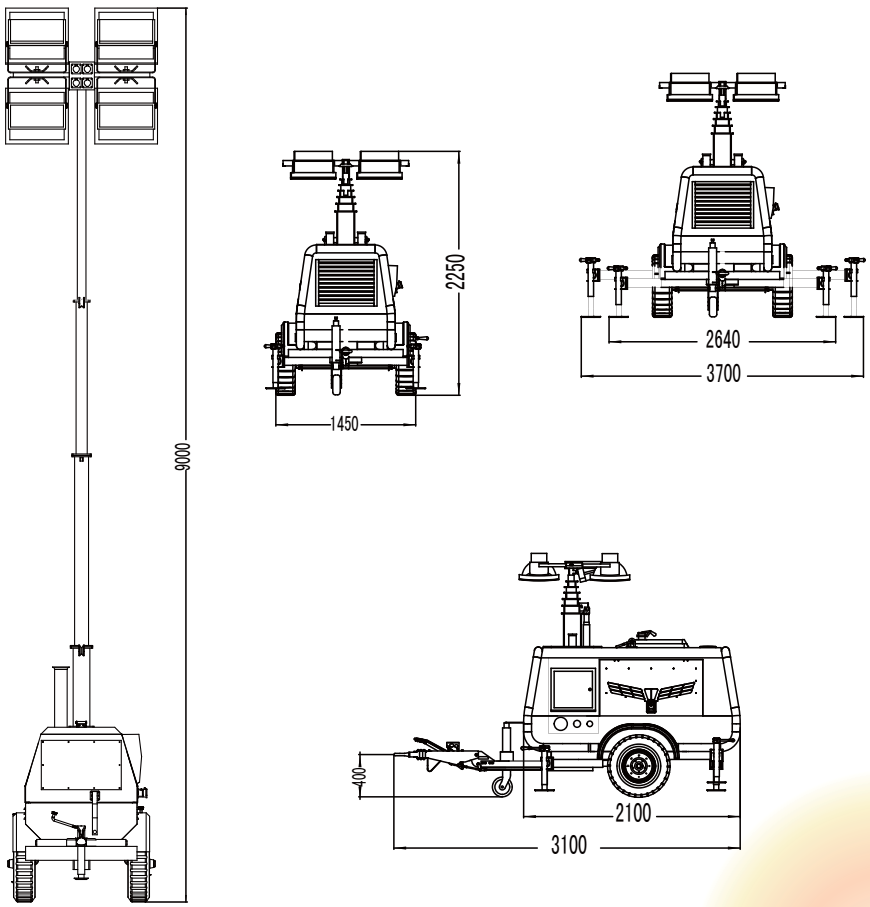

Note:The above datas could be modified in any time,please question our sales engineers when you want to get the latest technical details of relevant products.

4HVP4000

Standard Equipment	4HVP4000							
Length (mm)	3100 (2100,Detached the tow bar)							
Width (mm)	1450							
Height (mm)	2250							
Mast Height(m,Fully Extended)	9							
Weight (gross)	1355 kg							
Engine model	D1105-BG(Kubota)		3TNV76(Yanmar)		403D-11G(Perkins)		380 (Lester)	
Frequency(Hz)	50	60	50	60	50	60	50	60
Speed(rpm)	1500	1800	1500	1800	1500	1800	1500	1800
Continued Power(kVA)	7	9	7	9	7	9	7	9
Number of Cylinders	3							
Diesel Engine Characters	4-cycle, In line, Watercooled Diesel							
Combustion Type	Precombustion		Direct Injection		Indirect Injection		Direct Injection	
Engine Aspiration	Natural							
Emission Level	Stage3	Tier4	Stage3	Tier4	Stage2	Tier4	N.A.	Tier4
Alternator	Brushless & Single phase							
Rating Voltage (V)	230							
Alternator Insulation	class H							
Fuel Tank Type	Bunded Tank							
Fuel Tank Capacity	120 liters (31 US Gallons)							
Fuel Tank Operating Hours	72 hours							
Type of Lights	Metal Halide Floodlight (Original GEWISS)							
Number & Power of Lights	4×1000W							
Mast Extension	Hydraulic operation							
Number of Mast Section	8							
Mast Rotation	Manual Operation							
Light Bar Tilt	90° DC Electric operation							
Stabilizing Legs	Manual operation							
Trailer Suspension System	Hexagonal rubber suspension							
Braking System	Inertia drum braking with stable hitch in height							
Hitch	Ball or O ring							
Output Sockets	1 PCS (230V,10A)							
Input terminals & MTS	1 set (230V,32A)							
Acoustic Pressure	70dB(A) at 7 meters away							
Max. load quantity in a 40' container (sets)	8							

Optional Equipment	
More Powered Engine	Kubota/Yanmar/Perkins
Cold Weather Starting Kit	Kubota/Yanmar/Perkins
Thermal Control System	SWT
Automatic Light Controller	SWT(Including generator control function)
Braking System	Drum brakes
Stabilizing Legs	Hydraulic operation
Trailer Suspension System	Leaf spring axle & stable hitch in height
Light	Metal Halide Floodlight (Local Brand)

Note:The above datas could be modified in any time,please question our sales engineers when you want to get the latest technical details of relevant products.

VB Series Lighting Tower

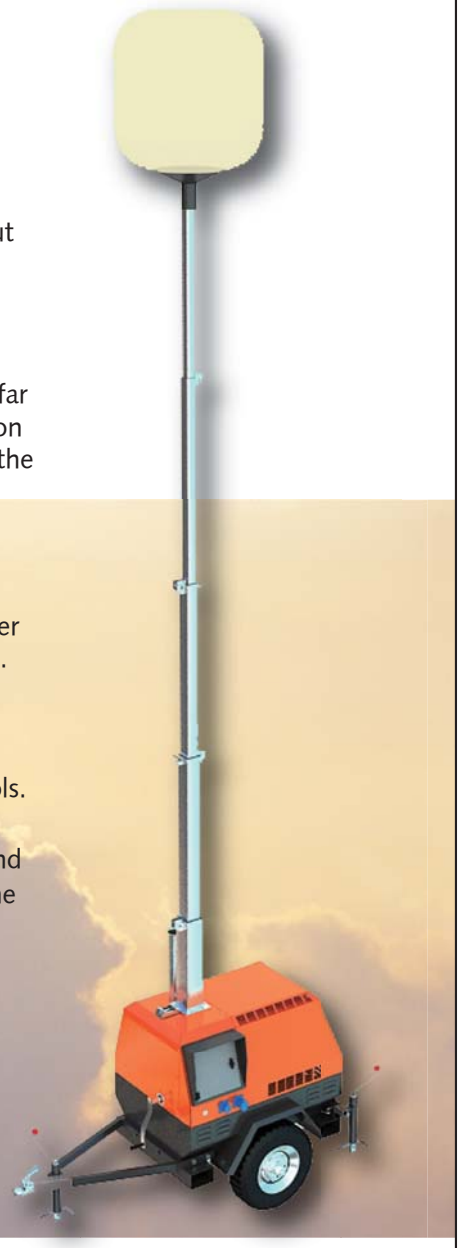

1. Glare-free lighting
Balloon light gives enough light to a work area but eyes are never blinded by glare even if seeing the light directly. It is gentle to surrounding traffic.

2. Wide area & 360° illumination
Balloon Light can radiate the homogeneous light far and wide from the balloon to all directions. Balloon Light that forms less darker shadow is also make the work more Efficient and comfortable.

3. Safety and reliability
The texture of the envelope is non flammable. Integrated thermo-switch protects light from power variations and helps control internal temperatures.

4. Easy installation
Since Balloon Light has integral Velcro fastener, message strip can be quickly installed with no tools.

5. Five-section of the lighting tower can be extend 7meters fully and internal reflective dome combine to light up a larger area。

3VB3000 Dimension

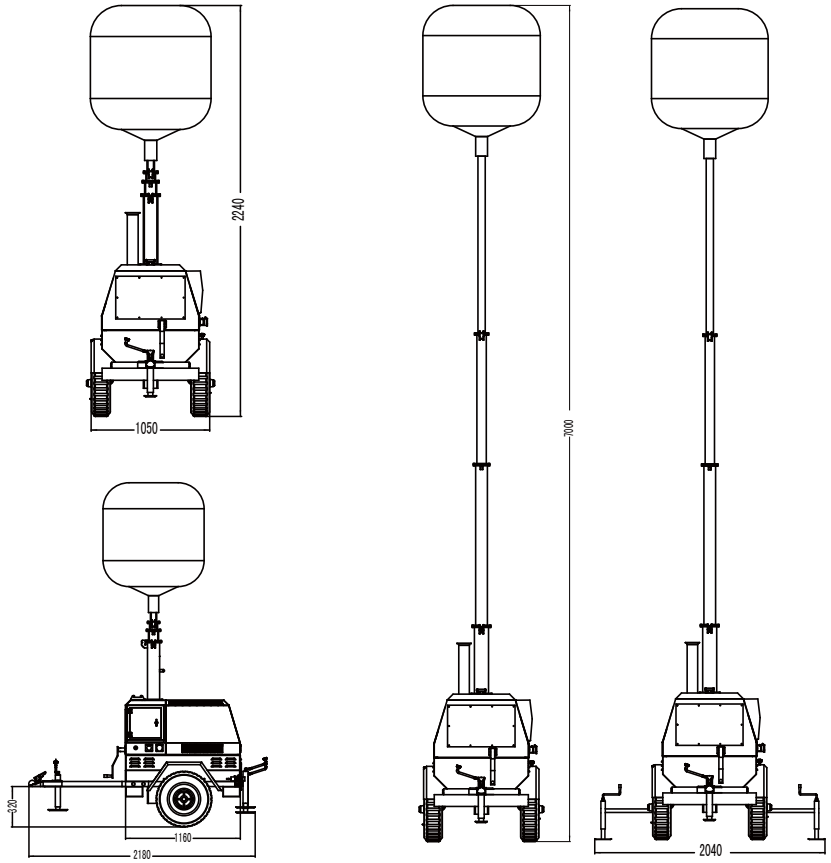

(mm)

Note:The above datas could be modified in any time,please question our sales engineers when you want to get the latest technical details of relevant products.

SUNIGHT 3VB3000

Standard Equipment	3VB3000	
Length (mm)	2180(1160,Detached the tow bar)	
Width (mm)	1050	
Height (mm)	2240(2070,Detached the lights)	
Mast Height(m,Fully Extended)	7	
Weight (gross)	420kg	
Engine model	186F (CHANGCHAI)	
Frequency(Hz)	50	60
Speed(rpm)	3000	3600
Continued Power(kVA)	4.2	5.0
Number of Cylinders	1	
Diesel Engine Characters	4-Cycle, In line, Aircooled diesel	
Combustion Type	Direct injection	
Engine Aspiration	Natural	
Emission Level	N.A.	Tier4
Rating Voltage (V)	230	
Alternator Insulation	class H	
Fuel Tank Capacity	38 liters (10 US Gallons)	
Fuel Tank Operating Hours	32 hours	
Type of Lights	balloon light	
Number & Power of Lights	3×1000W	
Mast Extension	Manual operation	
Number of Mast Sections	5	
Light Tilt	Manual operation	
Stabilizing Legs	Manual operation	
Trailer Suspension System	Hexagonal rubber suspension	
Hitch	Ball or O ring	
Output Sockets	1 PCS (230V,10A)	
Input Sockets & MTS	1 set (230V,16A)	
Acoustic Pressure	78dB(A) at 7 meters away	
Max. load quantity in a 20' container (sets)	10	

Optional Equipment	
Engine	Similar Famous or Local Brand
Mast Extension	Electric operation

Note:The above datas could be modified in any time,please question our sales engineers when you want to get the latest technical details of relevant products.

SUNIGHT VB1000

Standard Equipment	VB1000	
Length (mm)	2180(1160,Detached the tow bar)	
Width (mm)	1050	
Height (mm)	2240(2070,Detached the lights)	
Mast Height(m,Fully Extended)	7	
Weight (gross)	420kg	
Engine model	178F (CHANGCHAI)	
Frequency(Hz)	50	60
Speed(rpm)	3000	3600
Continued Power(kVA)	2.7	3.2
Number of Cylinders	1	
Diesel Engine Characters	4-Cycle, In line, Aircooled diesel	
Combustion Type	Direct injection	
Engine Aspiration	Natural	
Emission Level	N.A.	Tier4
Rating Voltage (V)	230	
Alternator Insulation	class H	
Fuel Tank Capacity	38 liters (10 US Gallons)	
Fuel Tank Operating Hours	60 hours	
Type of Lights	balloon light	
Number & Power of Lights	1×1000W	
Mast Extension	Manual operation	
Number of Mast Sections	5	
Light Tilt	Manual operation	
Stabilizing Legs	Manual operation	
Trailer Suspension System	Hexagonal rubber suspension	
Hitch	Ball or O ring	
Tire & Rim Size	13''	
Output Sockets	1 PCS (230V,10A)	
Input Sockets & MTS	1 set (230V,16A)	
Acoustic Pressure	78dB(A) at 7 meters away	
Max. load quantity in a 20' container (sets)	10	

Optional Equipment	
Engine	Similar Famous or Local Brand
Mast Extension	Electric operation

Note:The above datas could be modified in any time,please question our sales engineers when you want to get the latest technical details of relevant products.