"T" series is the traditional and pioneering type of Superwatt. It is competitive in price and practical. It includes tow types of TL and TN.

There are two kinds of operation : manual type and electrical type.

T Series Lighting Tower

——TL、TN

TL Series Lighting Tower

The Parts of TL Series Lighting Tower

Locating Pins

Metal Halide Spotlights

Metal Halide Floodlights

Hitch and Stabilizing Leg

IP66 Plugs and Sockets

Excellent-quality Genset

TL Series Manual Type
——4TL4000

- The winch with self-locking;
- The mast can be extended to 9 meters fully;
- Locating pin, locking pins, position limiting block ensure all operations to be safe and reliable;
- Tilt the lightbar and rotate the mast 359°manually to adjust the illuminated area;
- Assemblied with 4 high brightness and good shooting spotlights and floodlights are also optional;
- Using key switch or controller to manually start or stop the genset, control each light independently just by its own independent switch;
- The excellent-quality and multi-fault protection generator with the low-emission diesel engine and brushless alternator can power all of the lights stably and continuously;
- IP44 light plug and sockets;
- The AL-KO Hexagon rubber suspension system is suitable for variously rough road, and its maintenance-free axis's service life will be at least 20 years;

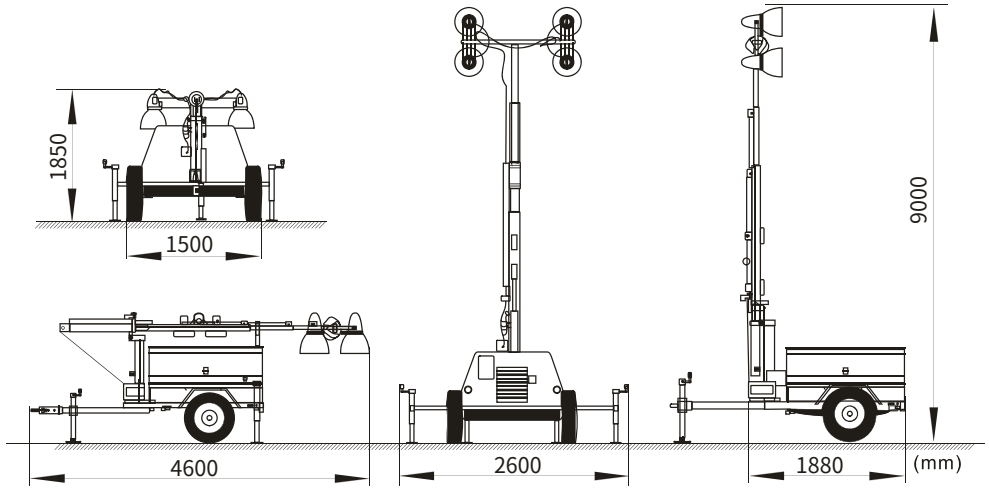

Note:The above datas could be modified in any time,please question our sales engineers when you want to get the latest technical details of relevant products.

4TL4000

Standard Equipment	4TL4000							
Length (mm)	4600							
Width (mm)	1500							
Height (mm)	1850							
Mast Height(m,Fully Extended)	9							
Weight (gross)	890kg							
Engine model	D1105-BG(Kubota)		3TNV76(Yanmar)		403D-11G(Perkins)		380 (Lester)	
Frequency(Hz)	50	60	50	60	50	60	50	60
Speed(rpm)	1500	1800	1500	1800	1500	1800	1500	1800
Continued Power(kVA)	7	9	7	9	7	9	7	9
Number of Cylinders	3							
Diesel Engine Characters	4-cycle, In line, Watercooled Diesel							
Combustion Type	Precombustion		Direct Injection		Indirect Injection		Direct Injection	
Engine Aspiration	Natural							
Emission Level	Stage3	Tier4	Stage3	Tier4	Stage2	Tier4	N.A.	Tier4
Alternator	Brushless & Single phase							
Rating Voltage (V)	230							
Alternator Insulation	class H							
Fuel Tank Capacity	95 liters (25 US Gallons)							
Fuel Tank Operating Hours	60 hours							
Type of Lights	Metal Halide Spotlight (Local Brand)							
Number & Power of Lights	4×1000W							
Mast Lifting & Extension	Manual operation							
Mast Rotation	330° Manual operation							
Light Bar Tilt	Manual operation							
Stabilizing Legs	Manual operation							
Trailer Suspension System	Hexagon rubber axis							
Hitch	Ball or O ring							
Tire Rim Size	14"							
Acoustic Pressure	75dB(A) at 7 meters away							
Max. load quantity in a 20' container (sets)	6							

Optional Equipment	
More Powered Engine	Kubota/Yanmar/Perkins
Cold Weather Starting Kit	Kubota/Yanmar/Perkins
Thermal Control System	SWT
Trailer Suspension System	Leaf spring axle & stable hitch in height
Light	GEWISS Metal Halide Floodlight

Note:The above datas could be modified in any time,please question our sales engineers when you want to get the latest technical details of relevant products.

TN Series Lighting Tower

- The winch with self-locking device device extend the mast easyly;
- The individual winch are able to make the mast extension reliable and safly;
- The lights can be adjusted manually at the non-lifting position , each light can be rotated 360°and tilted 90°;
- The mast can be rotated 330°manually;
- The galvanized mast and the powder coated canopy suit the outdoor environment for a long time;
- The AL-KO Hexagon rubber suspension system is suitable for variously rough road, and its maintenance-free axis's service life will be at least 20 years;
- The excellent-quality and multi-fault protection generator with the low-emission diesel engine and brushless alternator can power all of the lights stably and continuously;
- The simple and clear graphic indication and operating mark on the control panel;
- Four 5000lb individual stalizer legs can support the tower stably and reliably,even on rough ground ,and ensure the lighting tower can also work in the 8 grade windy weather;
- All the outdoor electrical plugs and sockets are at least IP44 protective class.

TN Series Dimension

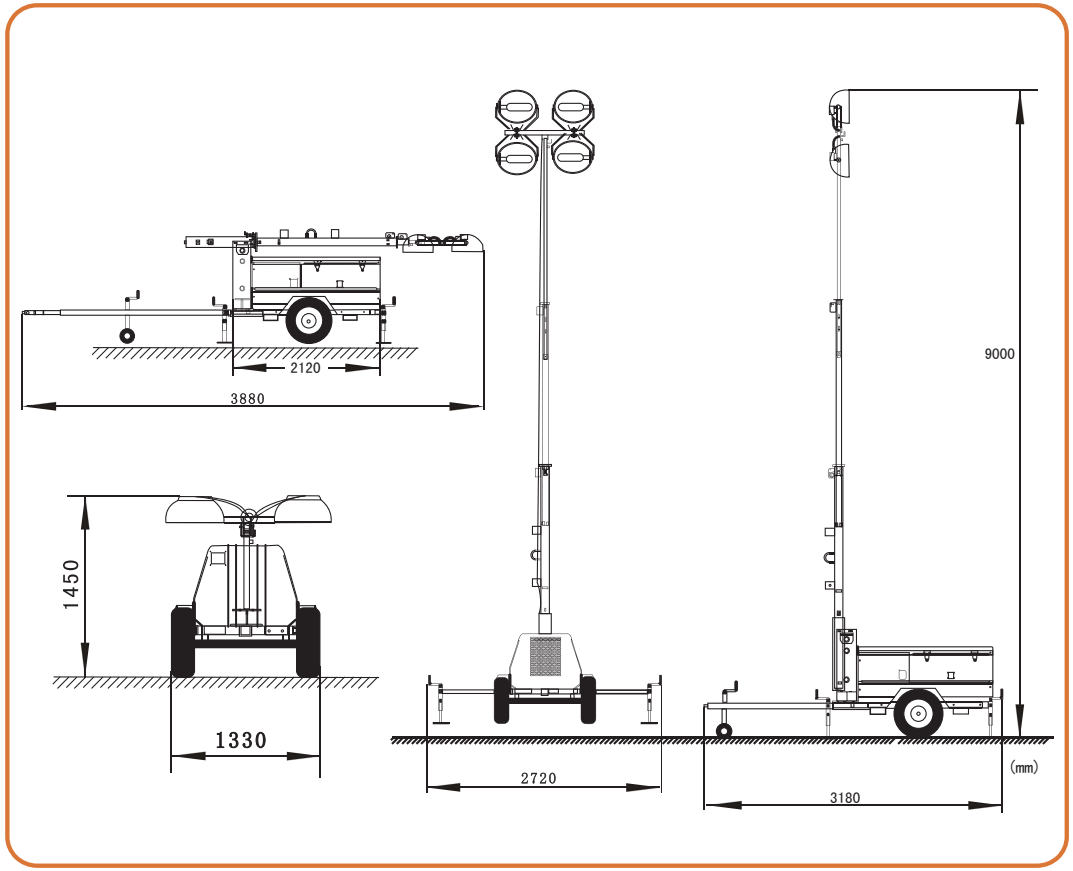

Note:The above datas could be modified in any time,please question our sales engineers when you want to get the latest technical details of relevant products.

4TN4000

Standard Equipment	4TN4000							
Length (mm)	3880							
Width (mm)	1330							
Height (mm)	1450							
Mast Height(m,Fully Extended)	9							
Weight (gross)	890kg							
Engine model	D1105-BG(Kubota)		3TNV76(Yanmar)		403D-11G(Perkins)		380 (Lester)	
Frequency(Hz)	50	60	50	60	50	60	50	60
Speed(rpm)	1500	1800	1500	1800	1500	1800	1500	1800
Continued Power(kVA)	7	9	7	9	7	9	7	9
Number of Cylinders	3							
Diesel Engine Characters	4-cycle, In line, Watercooled Diesel							
Combustion Type	Precombustion		Direct Injection		Indirect Injection		Direct Injection	
Engine Aspiration	Natural							
Emission Level	Stage3	Tier4	Stage3	Tier4	Stage2	Tier4	N.A.	Tier4
Alternator	Brushless & Single phase							
Rating Voltage (V)	230							
Alternator Insulation	class H							
Fuel Tank Capacity	190 liters (50 US Gallons)							
Fuel Tank Operating Hours	100 hours							
Type of Lights	Oval metal halide floodlight							
Number & Power of Lights	4×1000W							
Mast Lifting & Extension	Manual operation							
Mast Rotation	330° Manual operation							
Light Bar Tilt	Manual operation							
Stabilizing Legs	Manual operation							
Trailer Suspension System	Hexagonal rubber suspension							
Hitch	Ball or O ring							
Acoustic Pressure	70dB(A) at 7 meters away							
Max. load quantity in a 40' container (sets)	16							

Optional Equipment	
More Powered Engine	Kubota/Yanmar/Perkins
Cold Weather Starting Kit	Kubota/Yanmar/Perkins
Thermal Control System	SWT
Trailer Suspension System	Leaf spring axle & stable hitch in height
Light	GEWISS Metal Halide Floodlight

Note:The above datas could be modified in any time,please question our sales engineers when you want to get the latest technical details of relevant products.

4TN6000

Standard Equipment	4TN6000							
Length (mm)	3880							
Width (mm)	1330							
Height (mm)	1450							
Mast Height(m,Fully Extended)	9							
Weight (gross)	890kg							
Engine model	D1105-BG(Kubota)		3TNV82A(Yanmar)		403D-11G(Perkins)		385 (Lester)	
Frequency(Hz)	50	60	50	60	50	60	50	60
Speed(rpm)	1500	1800	1500	1800	1500	1800	1500	1800
Continued Power(kVA)	9.5	10.5	9.5	11.5	9	10	9	11
Number of Cylinders	3							
Diesel Engine Characters	4-cycle, In line, Watercooled Diesel							
Combustion Type	Precombustion		Direct Injection		Indirect Injection		Direct Injection	
Engine Aspiration	Natural							
Emission Level	Stage3	Tier4	Stage3	Tier4	Stage2	Tier4	N.A.	Tier4
Alternator	Brushless & Single phase							
Rating Voltage (V)	230							
Alternator Insulation	class H							
Fuel Tank Capacity	190 liters (50 US Gallons)							
Fuel Tank Operating Hours	80 hours							
Type of Lights	Oval metal halide floodlight							
Number & Power of Lights	4×1500W							
Mast Lifting & Extension	Manual operation							
Mast Rotation	330° Manual operation							
Light Bar Tilt	Manual operation							
Stabilizing Legs	Manual operation							
Trailer Suspension System	Hexagonal rubber suspension							
Hitch	Ball or O ring							
Acoustic Pressure	70dB(A) at 7 meters away							
Max. load quantity in a 40' container (sets)	16							

Optional Equipment	
More Powered Engine	Kubota/Yanmar/Perkins
Cold Weather Starting Kit	Kubota/Yanmar/Perkins
Thermal Control System	SWT
Trailer Suspension System	Leaf spring axle & stable hitch in height

Note:The above datas could be modified in any time,please question our sales engineers when you want to get the latest technical details of relevant products.

- Both of the mast lifting and extention are electrical operation,
- The safe and reliable "DC electrical line actuator" can finish all the operation without running the generator, and its self-locking ball screw can keep the mast at any position for a long time;
- The electrical adjusting of light bar tilt is option:it can be adjusted from horizontal to vertical;
- The lights can be adjusted manually at the non-lifting position , each light can be rotated 360°and tilted 90°;
- The mast can be rotated 330°manually;
- The galvanized mast and the powder coated canopy suit the outdoor environment for a long time;
- The AL-KO Hexagon rubber suspension system is suitable for variously rough road, and its maintenance-free axis's service life will be at least 20 years;
- The excellent-quality and multi-fault protection generator with the low-emission diesel engine and brushless alternator can power all of the lights stably and continuously;
- The simple and clear graphic indication and operating mark on the control panel;
- Four 5000lb individual stalizer legs can support the tower stably and reliably, even on rough ground ,and ensure the lighting tower can also work in the 8 grade windy weather;
- All the outdoor electrical plugs and sockets are at least IP44 protective class.

ETN Series Dimension

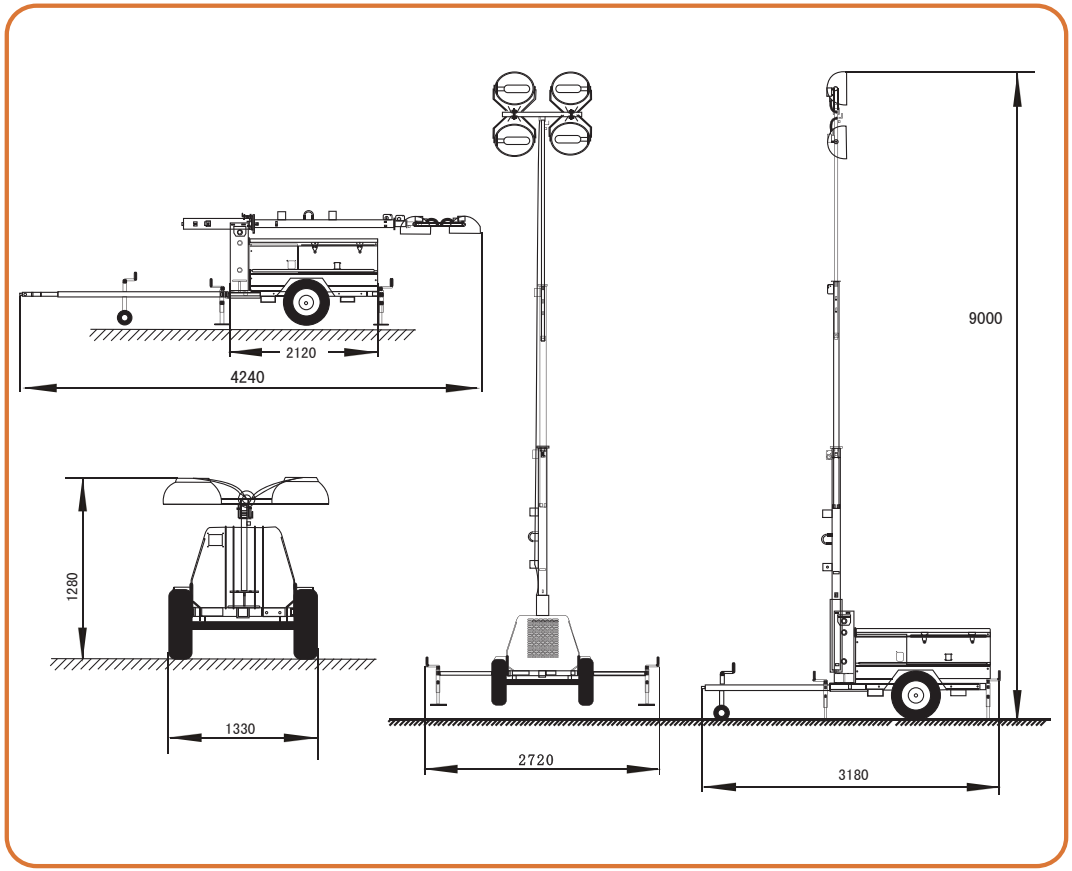

Note:The above datas could be modified in any time,please question our sales engineers when you want to get the latest technical details of relevant products.

4ETN4000

Standard Equipment	4ETN4000							
Length (mm)	4240							
Width (mm)	1330							
Height (mm)	1280							
Mast Height(m,Fully Extended)	9							
Weight (gross)	1030 kg							
Engine model	D1105-BG(Kubota)		3TNV76(Yanmar)		403D-11G(Perkins)		380 (Lester)	
Frequency(Hz)	50	60	50	60	50	60	50	60
Speed(rpm)	1500	1800	1500	1800	1500	1800	1500	1800
Continued Power(kVA)	7	9	7	9	7	9	7	9
Number of Cylinders	3							
Diesel Engine Characters	4-cycle, In line, Watercooled Diesel							
Combustion Type	Precombustion		Direct Injection		Indirect Injection		Direct Injection	
Engine Aspiration	Natural							
Emission Level	Stage3	Tier4	Stage3	Tier4	Stage2	Tier4	N.A.	Tier4
Alternator	Brushless & Single phase							
Rating Voltage (V)	230							
Alternator Insulation	class H							
Fuel Tank Capacity	190 liters (50 US Gallons)							
Fuel Tank Operating Hours	100 hours							
Type of Lights	Oval metal halide floodlight							
Number & Power of Lights	4×1000W							
Mast Lifting & Extension	DC Electric operation							
Mast Rotation	330°Manual Operation							
Light Bar Tilt	Manual operation							
Stabilizing Legs	Manual operation							
Trailer Suspension System	Hexagonal rubber suspension							
Hitch	Ball or O ring							
Output Sockets	1 PCS (single phase,10A)							
Acoustic Pressure	70dB(A) at 7 meters away							
Max.load quantity in a 40' container (sets)	16							

Optional Equipment	
More Powered Engine	Kubota/Yanmar/Perkins
Cold Weather Starting Kit	Kubota/Yanmar/Perkins
Thermal Control System	SWT
Trailer Suspension System	Leaf spring axle & stable hitch in height
Light	GEWISS Metal Halide Floodlight
Light Bar Tilt	90°DC Electric operation

Note:The above datas could be modified in any time,please question our sales engineers when you want to get the latest technical details of relevant products.

4ETN6000

Standard Equipment	4ETN6000							
Length (mm)	4240							
Width (mm)	1330							
Height (mm)	1280							
Mast Height(m,Fully Extended)	9							
Weight (gross)	1030 kg							
Engine model	D1105-BG(Kubota)		3TNV82A(Yanmar)		403D-11G(Perkins)		385 (Lester)	
Frequency(Hz)	50	60	50	60	50	60	50	60
Speed(rpm)	1500	1800	1500	1800	1500	1800	1500	1800
Continued Power(kVA)	9.5	10.5	9.5	11.5	9	10	9	11
Number of Cylinders	3							
Diesel Engine Characters	4-cycle, In line, Watercooled Diesel							
Combustion Type	Precombustion		Direct Injection		Indirect Injection		Direct Injection	
Engine Aspiration	Natural							
Emission Level	Stage3	Tier4	Stage3	Tier4	Stage2	Tier4	N.A.	Tier4
Alternator	Brushless & Single phase							
Rating Voltage (V)	230							
Alternator Insulation	class H							
Fuel Tank Capacity	190 liters (50 US Gallons)							
Fuel Tank Operating Hours	80 hours							
Type of Lights	Oval metal halide floodlight							
Number & Power of Lights	4×1500W							
Mast Lifting & Extension	DC Electric operation							
Mast Rotation	330°Manual Operation							
Light Bar Tilt	Manual operation							
Stabilizing Legs	Manual operation							
Trailer Suspension System	Hexagonal rubber suspension							
Hitch	Ball or O ring							
Output Sockets	1PCS (230,10A)							
Acoustic Pressure	70dB(A) at 7 meters away							
Max.load quantity in a 40' container (sets)	16							

Optional Equipment	
More Powered Engine	Kubota/Yanmar/Perkins
Cold Weather Starting Kit	Kubota/Yanmar/Perkins
Thermal Control System	SWT
Trailer Suspension System	Leaf spring axle & stable hitch in height
Light Bar Tilt	90°DC Electric operation

Note:The above datas could be modified in any time,please question our sales engineers when you want to get the latest technical details of relevant products.